Get set up in five minutes.

Fit it, learn the five buttons, pair your phone, plug in your radio. The latest version of this guide is always at goqhr.com/start.

Step 1. Get a full seal. It is most of the noise control.

Both earcups must seal all the way around your ears. Move hair, glasses, sunglasses and helmet straps out from under the cushions. Route the cable behind or inside your helmet, and keep it from lifting the top of either earcup.

Step 2. Know your buttons

Left earcup · Right earcup

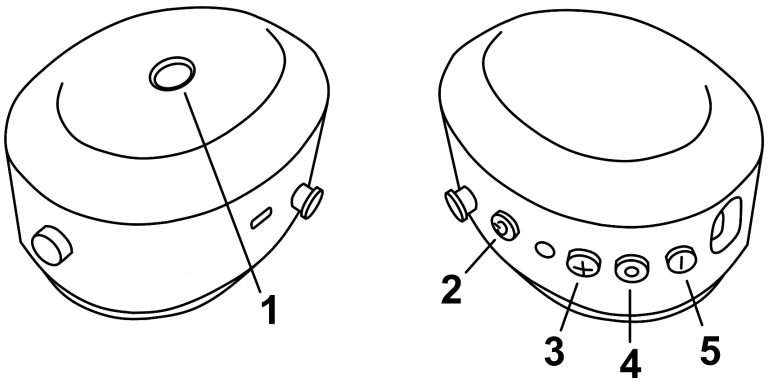

1. **PTT**, push to talk on your radio (left)
2. **Power**, on, off, pairing, sidetone
3. **Volume +**, hold to skip forward
4. **Multi-function**, play, calls, noise cancelling
5. **Volume –**, hold to skip back

Step 3. Power on and pair your phone

TO	DO THIS	YOU HEAR
Power on	Hold Power (2)	“Headset on”
Pair with your phone	From off, keep holding Power (2) 2 more seconds after it turns on. Pick “QHR Headset” on your phone	Three tones, “Bluetooth ready to connect”
Power off	Hold Power (2)	“Headset off”
Factory reset	From off, hold Power (2) for 12 seconds	“Factory reset complete”
Charge	Use the included USB-C cable. Charge fully first	Low battery prompt

Let go at the pairing tones, about 7 seconds from off. Reset starts at 12.

Controls, radio and app on the back.

Calls and music

Volume	Click + (3) or – (5)
Next track	Hold + (3)
Last track	Hold – (5)
Play, pause	Click the multi-function button (4)
Answer, end	Click (4) during a call

Noise and your own voice

Noise cancel	Triple-click (4) to turn active noise cancellation on or off. A voice prompt confirms
Sidetone	Triple-click Power (2) to hear your own voice. You hear “Sidetone on” or “Sidetone off”

Earbud port, MMCX models

Plug MMCX in-ear buds into the port inside each earcup for extra protection under the cups. Earbuds are not included.

Your radio

Plug your QHR radio cable into the locking Hirose port on the headset, then into your radio. Not sure which cable fits? Find it by radio model at goqhr.com/cables.

Talk	Hold PTT (1). A tone plays when you start.
Listen	Let go of PTT (1). A tone plays when you stop.
Hands-free	Triple-click PTT (1) to turn Intelligent VOX on or off. It keys the radio when you speak.

QHR CONNECT APP

Tune it from your phone.

Equalizer, noise cancellation, sidetone and firmware updates over the air. In beta now on iPhone and Android. Join at goqhr.com/connect.

Care

Wipe cushions with a damp cloth. Keep it out of water: water damage is not covered.

Warranty and returns

One-year limited warranty. Returns open day 30 to 45 after delivery. Terms at goqhr.com.

Help

hello@goqhr.com
goqhr.com/start for the latest version of this guide.

© 2026 Sunrado Manufacturing. iPhone® is a registered trademark of Apple Inc.